MiVue™ 903W Pro / 903WD Pro

User Manual

Mio™
all about you

Revision: R00
(07/2025)

Disclaimer

The screenshots in this manual may differ between different operating systems and software versions. You can download the latest User Manual of your product from Mio™ website (www.mio.com).

Specifications and documents are subject to change without notice. MiTAC does not warrant this document is error-free. MiTAC assumes no liability for damage incurred directly or indirectly from errors, omissions or discrepancies between the device and the documents.

Note

Not all models are available in all regions.

Depending on the specific model purchased, the colour and look of your device and accessories may not exactly match the graphics shown in this document.

MiTAC Europe Ltd.
The Pinnacle, Station Way, Crawley RH10 1JH, UK

MiTAC Europe Ltd. Sp. Z o. o, Oddzial w Polsce
ul. Puławska 405 A, 02-801 Warszawa, Poland

Table of Contents

Getting to know your dash cam 4

Using a memory card 6

Formatting a card 6

Using your dash cam in a vehicle 7

Precautions and notices 7

Mounting the dash cam 8

Starting the dash cam for the first time 11

Dash cam interface 11

Changing display mode 12

Recording in driving mode 13

Continuous recording 13

Event recording 13

Parking mode 14

Camera mode 15

Playback mode 16

Safety camera alerts 17

Adding a safety camera 17

Updating safety camera data 18

Getting connected 19

MiVue Pro 19

Setting up a WIFI connection 19

Customising the settings 20
File Playback 20
Connect App 20
Sound Recording 20
Driving Safety 20
SafetyCam 21
Parking Mode 21
Video Recording 22
System 23
SD Card 24
For more information 25
Caring for your device 25
About GPS 26
About FOSS 26
Safety precautions 27
Regulatory information 27
WEEE 29

Getting to know your dash cam

ⓘ Screenshots and other presentations shown in this manual may differ from the ones generated by the actual product.

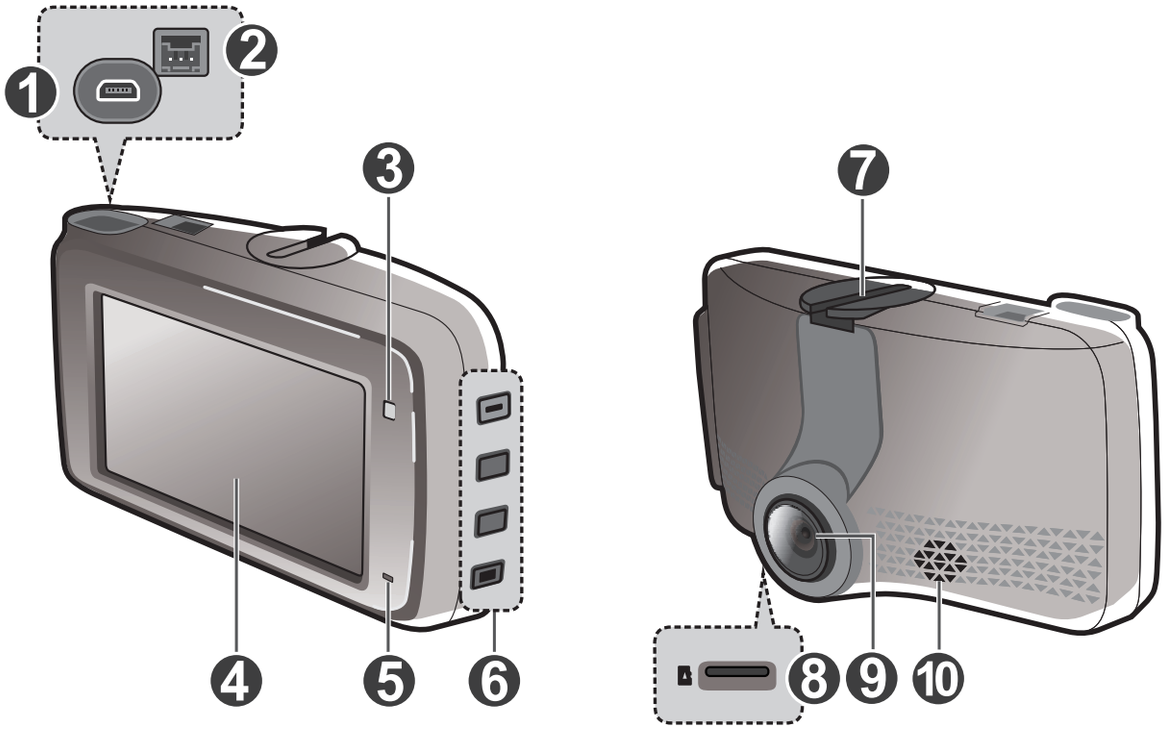

❶ Rear camera connector *
❷ Power connector
❸ LED indicator
❹ LCD display
❺ Microphone
❻ Function buttons
❼ Mounting slot
❽ Memory card slot
❾ Camera lens
❿ Speaker

** Optional accessory*

MiVue rear recording camera

Depending on the model purchased, a rear recording camera may be included with the dash cam for monitoring events taking place behind the vehicle.

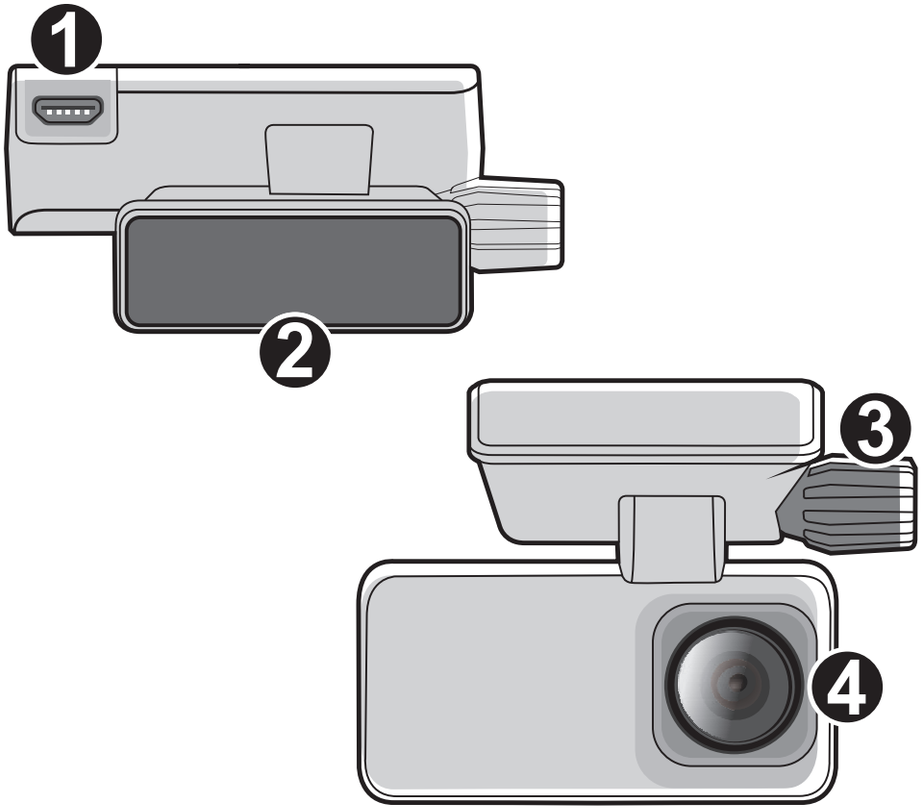

❶ Micro-USB connector

❷ Mounting base

❸ Angle adjustment knob

❹ Camera lens

Using a memory card

ⓘ This device requires the use of a UHS Speed Class 3 (U3/V30) or better memory card.

ⓘ MiTAC does not guarantee the product's compatibility with MicroSD cards from all manufacturers.

You have to insert a memory card before you can start recording. You should use separate MicroSD cards for recording and for regular data storage.

Insert the memory card before powering on your Mio. DO NOT remove the memory card during recording. Turn the device off before removing the memory card.

Hold the card (MicroSD) by the edges and gently insert it into the slot as shown in the illustration. Do not apply pressure to the centre of the memory card.

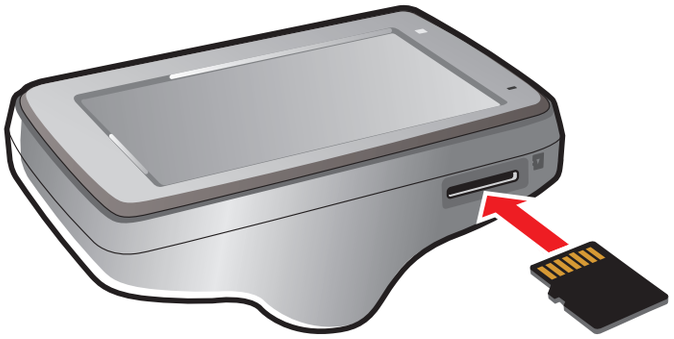

To remove a card, gently push the top edge of the card inwards to release and pull it out of the slot.

Formatting a card

Before you start recording, please format the MicroSD card to avoid malfunction caused by files not created by your Mio.

To format a memory card (all data will be erased):

1. Press ☰ .
2. Select **SD Card**.
3. Select **Format**.
4. When prompted, press ✓ to confirm.

Using your dash cam in a vehicle

Precautions and notices

- Do not operate the device while driving. Using this product does not change the requirement for a driver to take full responsibility for his or her driving behaviour. This responsibility includes observing all traffic rules and regulations in order to avoid accidents, personal injuries or property damage.
- A window mount is needed when using the dash cam in a car. Make sure that you place the dash cam in an appropriate place, so as not to obstruct the driver's view or deployment of airbags.
- Make sure that no object is blocking the camera lens and no reflective material is placed near the lens. Please keep the lens clean.
- If the car's windscreen is tinted with a coating, it may impact recording quality.
- To ensure the highest quality recordings, you are advised to place the dash cam near the rear view mirror.
- Select an appropriate location for mounting the device in a vehicle. Never place the device where the driver's field of vision is blocked.
- If the car's windscreen is tinted with a reflective coating, it may be athermic and impact GPS reception. In this instance, please mount your device in a "clear area".
- The system will automatically calibrate the G-sensor of the device during startup. To avoid G-sensor malfunction, always turn the device on AFTER it is properly mounted in the vehicle.

Mounting the dash cam

Make sure your car is parked on level ground. Follow the instructions below to mount your dash cam in a vehicle securely.

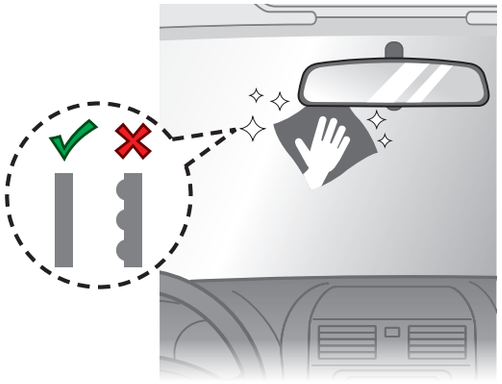

1. Before attaching the device mount to the windscreen, it is recommended to clean the windscreen with rubbing alcohol and make sure that the installation area is free of dust, oil and grease.
2. Connect the mount to the dash cam by aligning the mount with the mounting groove located at the top of the device.

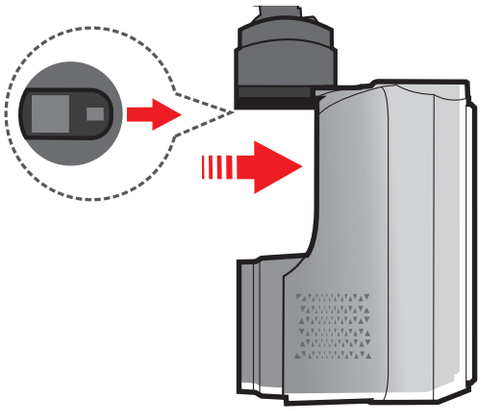

3. Attach the static cling film to the windscreen, and then install the mount over the static cling film.

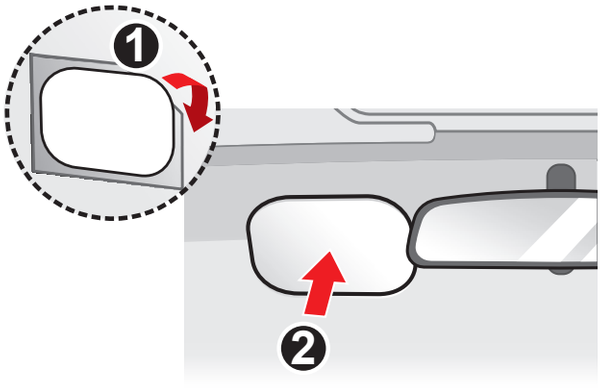

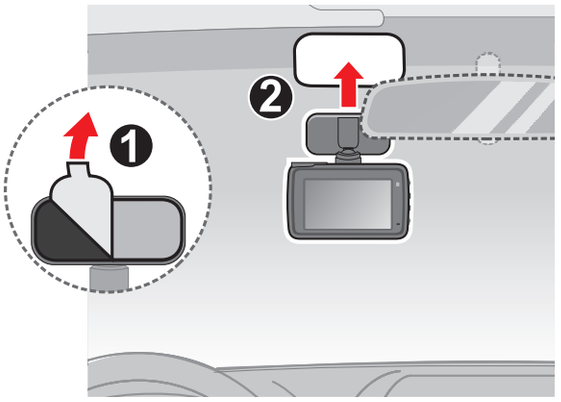

4. Connect the dash cam to a power source by using the car charger or 12V hardwire kit. Route the cable through the top ceiling and the A-pillar so that it does not interfere with driving. Make sure that the cable installation does not interfere with the vehicle's airbags or other safety features.

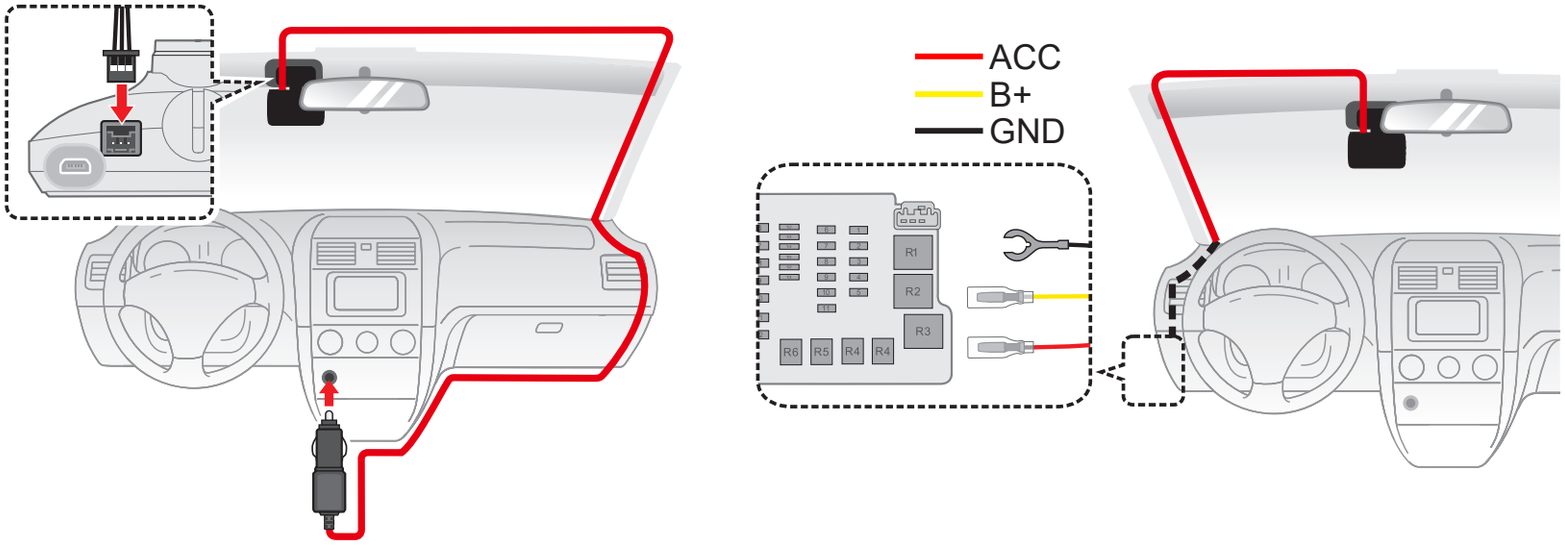

5. If the model purchased includes a rear recording camera, follow the connection diagram below to install it. Loosen the angle adjustment knob to set its recording angle.

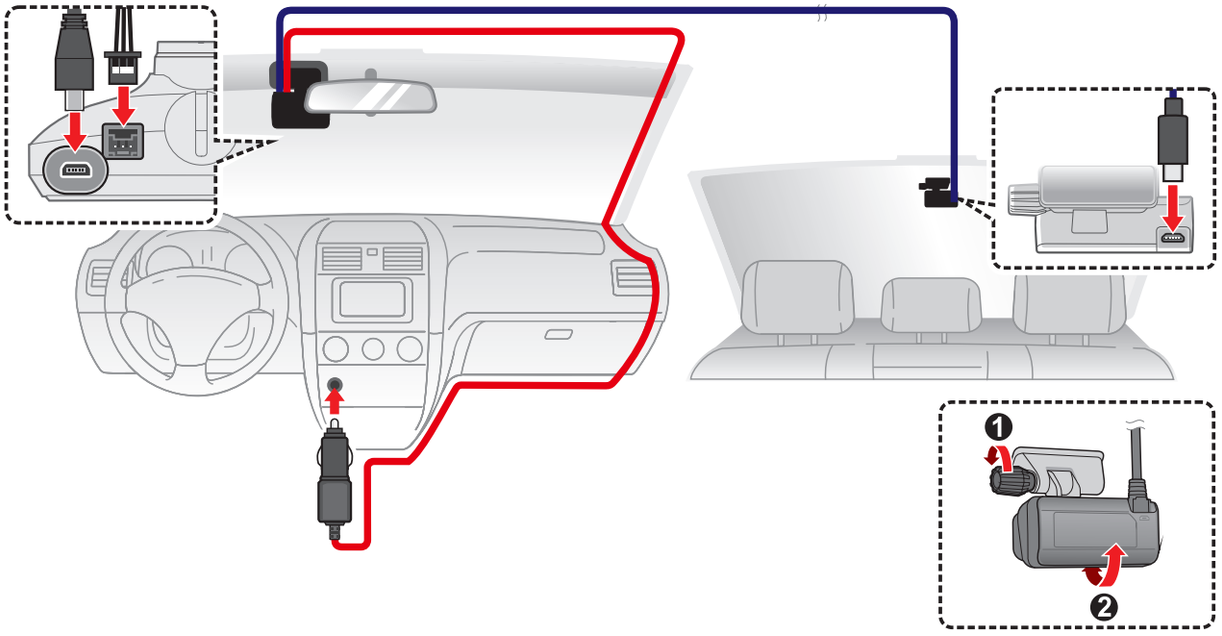

ⓘ When adjusting the angle of mounting, make sure that the camera's view is parallel with the level ground, and the ground to sky ratio is close to a 50/50 split.

ⓘ The placement of the device and cables may vary depending on the vehicle model. If you encounter any problems during installation, contact a skilled installer (such as the service personnel of the vehicle) for assistance.

Starting the dash cam for the first time

Complete the installation according to the instructions in the “Using your dash cam in a vehicle” section. Once the vehicle engine is started, the dash cam automatically turns on.

When you power on your Mio for the first time, follow the on-screen prompts to complete the following:

- Select your preferred language.
- Set up the correct date and time by syncing with GPS or selecting your local time zone.
- Set the preferred distance unit.

Dash cam interface

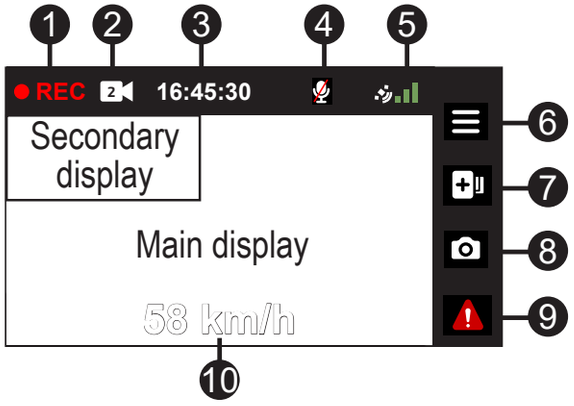

1. Recording indicator
2. Dual camera indicator *
3. Time display
4. Microphone status
5. GPS signal indicator
6. Opens system menu **
7. Adds a safety cam at current location
8. Takes a photo ***
9. Saves an emergency recording
10. Driving speed display

** Only appears when the rear recording camera is connected*
*** Press and hold to turn the device on & off*
**** Press and hold to switch between dash cam and rear camera (if installed) views*

Changing display mode

If a rear recording cam is connected, the button can also be used to switch between display modes. Press and hold the button for two seconds to cycle through the four different display modes:

- Picture-in-Picture with the dash cam image showing in the main display and rear recording camera image showing in the secondary display.
- Picture-in-Picture with the rear recording camera image showing in the main display and dash cam image showing in the secondary display.
- Single picture showing only the dash cam image.
- Single picture showing only the rear recording camera image.

Recording in driving mode

Continuous recording

The system will automatically begin continuous recording shortly after start-up.

When recording is in progress, you can manually stop recording by pressing . Press to return to the recording screen; the system will start recording automatically.

The recording may be divided into several video clips; recording will not stop between video clips. When your memory card fills up with continuous recordings, it will automatically record over the oldest existing files in this category.

Continuous recordings can be found in the “Normal” category for file playback.

Event recording

By default, if an event happens, such as a sudden impact, high speed driving, an aggressive turn or an accidental crash during continuous recording, the G-sensor will prompt your Mio to start recording the event.

Whenever event-driven recording is triggered, the video that contains the actual event, as well as the videos captured immediately before and after the event are copied into the "Event" category. When your memory card fills up with event recordings, it will record over the oldest existing files in this category.

If you want to manually start an event recording while continuous recording is in progress, press the Event button ( ). You can manually stop recording by pressing and the system will resume continuous recording.

Event recordings can be found in the “Event” category for file playback.

Parking mode

ⓘ This feature requires the use of Mio's 12V hardwire kit.

Your dash cam supports the parking recording function. Parking mode is disabled by default. Before enabling Parking mode, please check the memory storage allocation of your device. Select ☰ > **SD Card** > **Storage Allocation** to set a proper allocation for parking recording. Changing the allocation will erase the memory card, so save any videos or photos to your computer first.

You can enable the function by selecting ☰ > **Parking Mode** > **Parking Mode** > **Smart Mode** or **Passive Powered Mode**. Parking Mode monitoring is activated automatically when the ignition is switched off.

- **Smart Mode**: Supports recordings that are triggered by the G-sensor and motion detection. The display is turned off while operating under this mode, press any of the function buttons to activate the display.

- **Passive Powered Mode**: Supports recordings after G-sensor detections are triggered. While the dash cam is recording, press any of the function buttons to activate the screen. The dash cam will power off again once recording is complete.

The parking recording will save the duration from several seconds before until several seconds after an event. The parking recording can last longer if the sensor is triggered again during recording. When your memory card fills up with parking recordings, it will record over the oldest existing files in this category.

To exit Parking mode and resume continuous recording, press ↩ . Parking recordings can be found in the "Parking" category for file playback.

Camera mode

Your Mio allows you to take a photo. While recording is in progress, press .
Photos can be found in the “Photo” category for file playback.

Playback mode

To select a video or photo for playback:

1. Press ≡ > **File Playback** > ✓ .
2. Select the desired type and then press ✓ .
3. Press ← / → to select the desired file from the list then press ✓ .
4. Press ⏮ / ⏭ to view the previous/next file.
5. When viewing a photo, you can press ••• to do the following:
   - **View front photo/View rear photo**: Views the corresponding front/rear photo (selected models only).
   - **Delete**: Deletes the file.
6. When viewing a video, you can press ••• to do the following:
   - **Play** / **Pause**: Starts or pauses the playback.
   - **Play front video/Play rear video**: Plays the corresponding front/rear video (selected models only).
   - **Delete**: Deletes the file.

ⓘ Deleted files cannot be recovered. Make sure to back up your files before deletion.

Safety camera alerts

ⓘ For legal reasons, the safety camera function is not available in all countries.

You can receive alerts to warn you about the locations of safety (speed) cameras which will enable you to monitor your speed through these areas.

When a safety camera appears and is positioned in the detectable direction, you will receive alerts. The screen will display a visual alert and you will also receive audio warnings.

When the alert sound setting is set to **Beep**:

- When your car approaches a safety camera, you will receive a normal beep alert.
- When your car approaches a safety camera at a speed over the set threshold, you will receive a persistent beep alert until your car speed drops lower than the appropriate speed limit.
- When your car passes through a safety camera, you will be notified by a different beep alert.

Adding a safety camera

ⓘ You can add a custom safety camera only when a GPS fix is established.

Your dash cam allows you to customise the safety camera database. You can add up to 100 custom safety cameras in your dash cam.

Follow the steps to configure a custom safety camera:

1. To add a custom safety camera at the current location, press on the recording screen.
2. The next time you pass by the same location, you will receive alerts issued by the dash cam.

3. To view the information on the custom safety camera, select ≡ > **SafetyCam** > **Custom SafetyCam** then select the safety camera that you want to check.
4. Press 🗑 to remove the custom safety camera from the dash cam.

Updating safety camera data

MiTAC does not warrant that all types and locations of safety camera data are available as cameras may be added, removed or relocated.

Occasionally, MiTAC may offer you updates of safety camera data. Visit the Mio website for available downloads and follow instructions to complete the update.

Getting connected

MiVue Pro

ⓘ The MiVue Pro app is compatible with iOS 11.0 (and above) and Android 8.0 (and above) devices. MiTAC does not guarantee the product's compatibility with smartphones from all manufacturers.

ⓘ Not all MiVue dash cam models support the MiVue Pro app or all its features.

MiVue Pro allows you to view, share and back up the videos recorded on a MiVue dash cam via WIFI. Search for "MiVue Pro" in the Apple App Store / Google Play Store or scan the QR code to download the app for free.

Download on the App Store

GET IT ON Google play

Setting up a WIFI connection

ⓘ The WIFI connection between your Mio and smartphone is not Internet-enabled.

The WIFI function allows you to connect the dash cam to your smartphone.

1. The WIFI function is disabled by default. You can enable WIFI by selecting ☰ > **Connect App** > **Connect App**. Once enabled, the WIFI setting screen displays the SSID and password of the dash cam.
2. On your smartphone, open MiVue Pro and follow the on-screen instructions to set up the connection.

Customising the settings

ⓘ Not all setting items and options are available for all models.

Press ☰ to customise system settings.

File Playback

Plays recorded videos and photos.

Connect App

- **Connect App:** Turns on WIFI.
- **Change Password:** Changes the WIFI password.

Sound Recording

Sets if you want to include sounds in the recordings. A system icon ( ) is shown on the top of the recording screen if sound recording is disabled.

Driving Safety

- **Calibration:** You are advised to calibrate the system constantly in order to be alerted properly. Follow the steps to calibrate the system.
  1. Drive the vehicle in the middle of the lane.
  2. Ask a passenger to select this option and then follow the on-screen instructions to complete calibration.

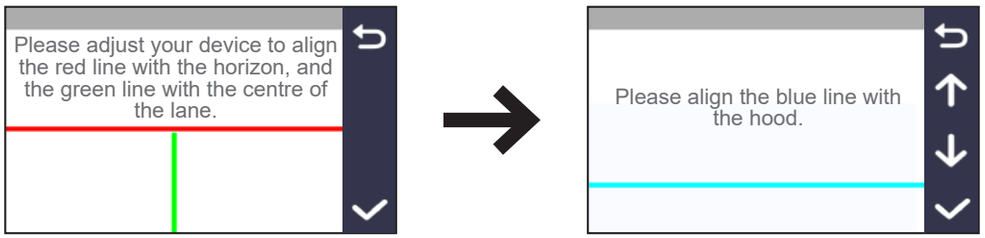

- **Headlight Reminder:** Once enabled, the system will remind you to turn the lights on when you are driving after dark.
- **Driver Fatigue Alert:** Once enabled, the system will remind you to take a break for a long-distance drive.
- **Eco Drive Indicator:** Once enabled, the system will display the Eco drive indicator on the screen. The colour of the indicator will change (red, yellow or green) depending on your driving status to remind you to drive more efficiently.

SafetyCam

- **Detection:** Enables or disables safety camera alerts.
- **Alert Sound:** Turns the audio alert on (**Beep** or **Voice**) or **Off**.
- **Alert Distance:** The system will alert you at a preset distance (**Short**, **Medium** or **Long**) when a safety camera is ahead.
- **Alert Method**
  - **Smart Alert:** Sets the alert distance function according to the current GPS car speed.
  - **Standard Alert:** Sets the alert distance function according to the speed limit.
- **Threshold:** Sets the speed value for the dash cam to start issuing alerts.
- **Cruise Speed Alert:** Sets the limit for the cruise speed. When you drive at a cruise speed over the set value, you will receive alerts by the dash cam.
- **Custom SafetyCam:** Lists all custom safety cameras which are sorted by the created time.
- **Mobile SafetyCam Alert:** Enables or disables mobile safetycam alerts.

Parking Mode

- **Parking Mode:** Sets parking mode monitoring to **Smart Mode** or **Passive Powered Mode**.

- **Cut-off Voltage:** To prevent over draining the battery while Parking Mode is active, the dash cam will stop drawing power once the voltage has reached the specified value.
- **Off Timer:** Once ignition is turned off, Smart Mode monitoring is activated for the duration of time specified in the timer setting before automatically switching to Passive Powered Mode.
- **TimeLapse:** Creates time-lapse recordings under Smart Mode. When enabled, Parking Mode videos are stored as one frame per second time-lapse videos.
- **Detection Method:** Sets the parking detection method to **Only G-sensor** or **Both Motion & G-sensor** (not available under Passive Powered Mode).
- **G-Sensor Sensitivity:** Sets the sensitivity level of the G-sensor that allows automatic triggering of parking recording when the dash cam is in Parking mode.
- **Motion Sensitivity:** Sets the sensitivity level of motion detection to **Low**, **Medium** or **High** (not available under Passive Powered Mode).
- **Motion Detection Area:** Sets the area of motion detection to **Whole Area** or **Main Area Only** (not available under Passive Powered Mode).

Video Recording

- **Video Clip Length:** Sets the length of each video clip for a continuous recording.
- **Video Resolution:** Sets the resolution of the video.
- **Frequency:** Sets the frequency for the camera to avoid problems caused by artificial light sources that are not constant.
- **EV:** Sets the exposure level to adjust the brightness of the image.
- **G-Sensor Sensitivity:** Sets the sensitivity level of the G-sensor that allows automatic triggering of the event recording while continuous recording is in progress.
- **Stamps:** Sets the information (**Coordinates** or **G-Sensor**) that will be displayed on the recorded video.

- **Speed stamp:** Displays the driving speed on the recorded video.
- **Text stamp:** Displays customisable text information.

System

- **Satellites:** Displays the status of the GPS/GLONASS signal reception. You can press ⚙ and then select **GPS** or **GLONASS** for better signal reception if the need arises.
- **Date/Time:** Sets the system date and time.
  - **Use GPS time:** Select the **Time Zone** and **Daylight Saving Time** settings for your location.
  - **Manual:** Use + / − to adjust the value of the selected field; press → and repeat the step until all fields have been changed. When done, press ✓ .
- **Welcome Sound:** Enables or disables the notification sounds during start-up.
- **System Sound:** Enables or disables system notification sounds.
- **Volume:** Adjusts the volume level.
- **LCD Standby**
  - **Always On:** Keeps the LCD on.
  - **10 sec** / **1 min** / **3 min:** Sets the timer for the LCD to turn off automatically after recording starts.
- **Language:** Sets the language.
- **Distance Unit:** Sets the preferred distance unit.
- **Restore to Defaults:** Restores system settings to the factory defaults.
- **Version:** Displays software information.

SD Card

- **Storage Allocation:** The system offers several memory configurations for storing videos and photos. Select a suitable configuration based on usage.
- **Format:** Formats the memory card (all data will be erased).

For more information

Caring for your device

Taking good care of your device will ensure trouble-free operation and reduce the risk of damage.

- Keep your device away from excessive moisture and extreme temperatures.
- Avoid exposing your device to direct sunlight or strong ultraviolet light for extended periods of time.
- Do not place anything on top of your device or drop objects on your device.
- Do not drop your device or subject it to severe shock. Installation height < 2m.
- Do not subject your device to sudden and severe temperature changes. This could cause moisture condensation inside the unit, which could damage your device. In the event of moisture condensation, allow the device to dry out completely before use.
- The screen surface can easily be scratched. Avoid touching it with sharp objects. Non-adhesive generic screen protectors designed specifically for use on portable devices with LCD panels may be used to help protect the screen from minor scratches.
- Never clean your device with it powered on. Use a soft, lint-free cloth to wipe the screen and the exterior of your device.
- Do not use paper towels to clean the screen.
- Never attempt to disassemble, repair or make any modifications to your device. Disassembling, modifying or any attempt to repair could cause damage to your device, may inflict bodily harm or damage to property and will void any warranty.
- Do not store or carry flammable liquids, gases or explosive materials in the same compartment as your device, its parts or accessories.

- To discourage theft, do not leave the device and accessories in plain view in an unattended vehicle.
- Overheating may damage the device.
- Operating temperature: 60°C (Max.); Storage temperature: -20°C to 80°C.

About GPS

- GPS is operated by the United States government, which is solely responsible for the performance of GPS. Any change to the GPS system can affect the accuracy of all GPS equipment.
- GPS satellite signals cannot pass through solid materials (except glass). When you are inside a tunnel or building, GPS positioning is not available. Signal reception can be affected by situations such as bad weather or dense overhead obstacles (such as trees, tunnels, viaducts and tall buildings).
- The GPS positioning data is for reference only.

About FOSS

https://service.mio.com/M0100/F0110_DownLoad_Faq.aspx?bullid=AllBull&faqid=133209&Region=Rest%20of%20Europe&Language=English

https://service.mio.com/M0100/F0110_DownLoad_Faq.aspx?bullid=AllBull&faqid=132924&Region=Rest%20of%20Europe&Language=English

https://service.mio.com/M0100/F0110_DownLoad_Faq.aspx?bullid=AllBull&faqid=132923&Region=Rest%20of%20Europe&Language=English

Safety precautions

- Use only the charger supplied with your device. Use of another type of charger may result in malfunction and/or danger.
- This product is intended to be supplied by a LISTED Power Unit marked with “LPS”, “Limited Power Source” and output rated + 12 V dc / 2.0 A.
- Do not use the charger in a high moisture environment. Never touch the charger when your hands or feet are wet.
- Allow adequate ventilation around the charger when using it to operate the device or charge the battery. Do not cover the charger with paper or other objects that will reduce cooling. Do not use the charger while it is inside a carrying case.
- Connect the charger to a proper power source. The voltage requirements are found on the product case and/or packaging.
- Do not use the charger if the cord becomes damaged.
- Do not attempt to service the unit. There are no serviceable parts inside. Replace the unit if it is damaged or exposed to excess moisture.

Regulatory information

For regulatory identification purposes, MiVue 903W Pro / 903WD Pro is assigned a model number of N926.

European Union Compliance Information

Products with the CE marking comply with the Radio Equipment Directive (RED) (2014/53/EU) - issued by the Commission of the European Community.

Compliance with these directives implies conformity to the following European Standards:

EN 300 328 V2.2.2 (2019-07)

EN 303 413 V1.2.1 (2021-02)

EN 55032:2015/A11:2020

EN 55032:2015/A1:2020

EN 55035:2017/A11:2020

EN 301 489-1 V2.2.3 (2019-03)

EN 301 489-17 V3.3.1 (2024-09)

EN 301 489-19 V2.2.1 (2020-07)

EN 50498:2010

IEC 62368-1:2018 (Third Edition)

The manufacturer cannot be held responsible for modifications made by the User and the consequences thereof, which may alter the conformity of the product with the CE Marking.

IEEE 802.11 b/g/n 2.4GHz

- Operating frequency range: 2412 - 2472MHz
- Maximum output power: 19.99dBm

Declaration of conformity

For regulatory identification purposes, MiVue 903W Pro / 903WD Pro is assigned a model number of N926.

Hereby, MiTAC declares that the radio equipment type N926 is in compliance with Directive 2014/53/EU. The full text of the EU declaration of conformity is available at the following internet address: https://support.mio.com/Mio.htm

WEEE

This product must not be disposed of as normal household waste, in accordance with the EU directive for waste electrical and electronic equipment (WEEE – 2012/19/EU). Instead, it should be disposed of by returning it to the point of sale, or to a municipal recycling collection point.

UK Compliance Information

UK
CA

Hereby, MiTAC declares that this device is in compliance with Radio Equipment Regulations 2017.